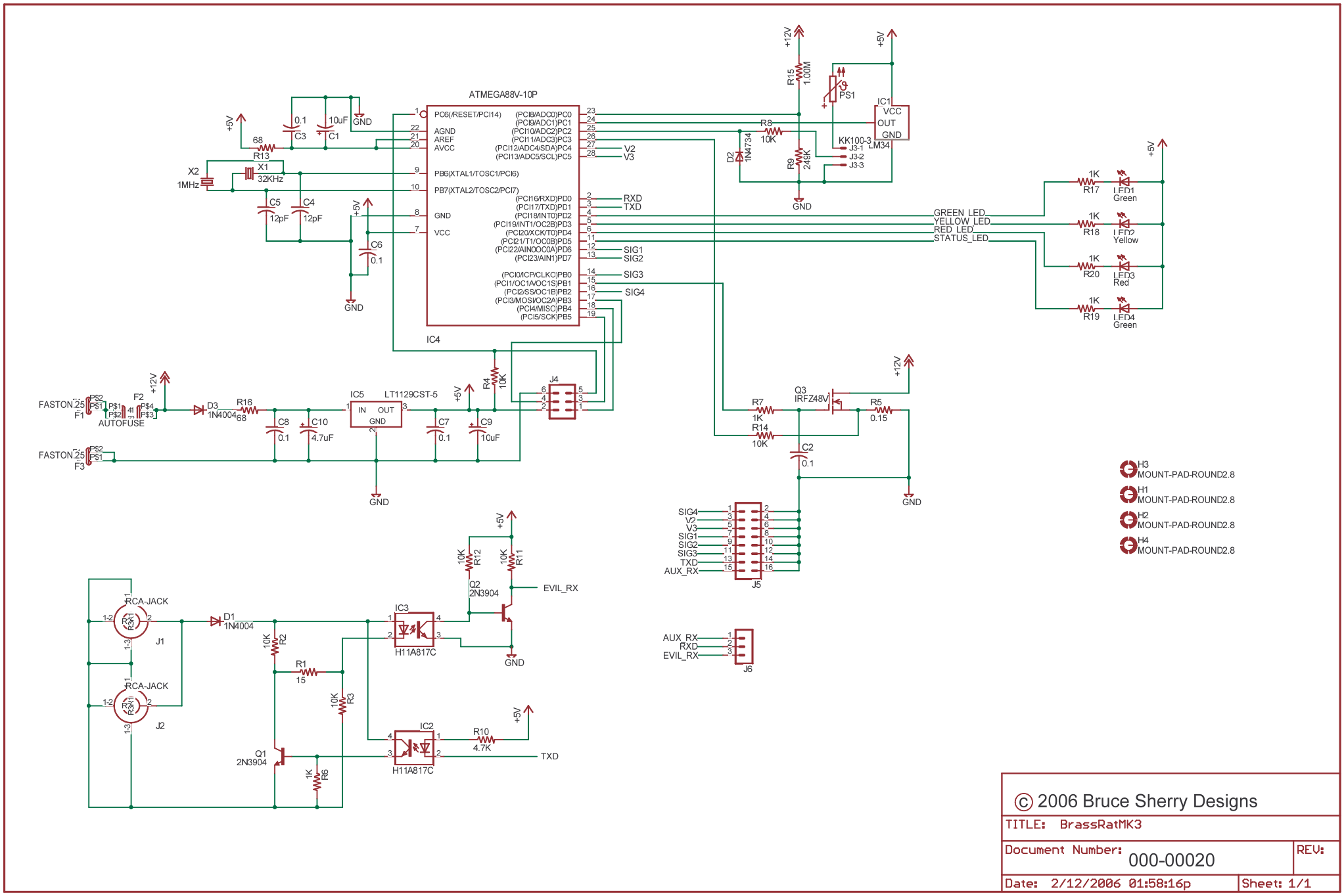

© 2006 Bruce Sherry Designs

TITLE: BrassRatMK3	
Document Number: 000-00020	REV:
Date: 2/12/2006 01:58:16p	Sheet: 1/1